Suzhou Talent Microwave,Inc
sales@talentmw.com
www.talentmw.com

Dual Balance Mixer

RF:0.5-2.5 GHz/LO:0.5-2.5 GHz/IF:DC-1 GHz

Model: TLBM-0.5G2.5G-S

TLBM-0.5G2.5G-S is a dual balance mixer. The mixer covers the RF frequency from 0.5 to 2.5 GHz ,LO frequency from 0.5 to 2.5 GHz with an extremely broad IF output from DC to 1 GHz. The mixer offers a conversion loss of 13 dB typical and LO input power of 17 dBm typical.

Features:

- RF coverage : 0.5-2.5GHz
- LO coverage : 0.5-2.5GHz
- IF operation : DC-1GHz
- Conversion loss: 13dB Typ
- High LO to RF isolation
- Dual Balanced Mixer

Applications:

- Defense & federal communications
- Instrumentations

电气特性 Electrical Characteristics:

参数 Parameter	Min	Typ	Max	单位 Units
RF频率 RF Frequency	0.5		2.5	GHz
LO频率 LO Frequency	0.5		2.5	GHz
LO 驱动功率 LO-Input power		17		dBm
IF频率 IF Frequency	DC		1	GHz
输入1dB压缩点 Input P1dB		12		dBm
变频损耗 Conversion Loss		13		dB
RF至IF隔离度 RF to IF Isolation		10		dB
RF至LO隔离度 RF to LO Isolation		35		dB
LO至IF隔离度 LO to IF Isolation		35		dB

机械特性 Mechanical Specifications:

参数 Parameter	指标 Value	单位 Units
端口1 Connector1	SMA Female	
端口2 Connector 2	SMA Female	
端口3 Connector 3	SMA Female	
直流偏置 Bias	/	
尺寸 Size	23.6*14.4*8	mm
重量 Weight		g

Suzhou Talent Microwave,Inc
sales@talentmw.com
www.talentmw.com

绝对最大值 Absolute Maximum Ratings:

参数 Parameter	指标 Value
RF/LO功率 RF/LO Input Power	TBD
ESD灵敏度 ESD sensitivity (HBm)	Class 0, passed 150V

接口定义 Port Functions

端口 Port	功能 Function
Port1	RF
Port2	IF
Port3	LO

外形图 Outline Drawing:

Unit:mm

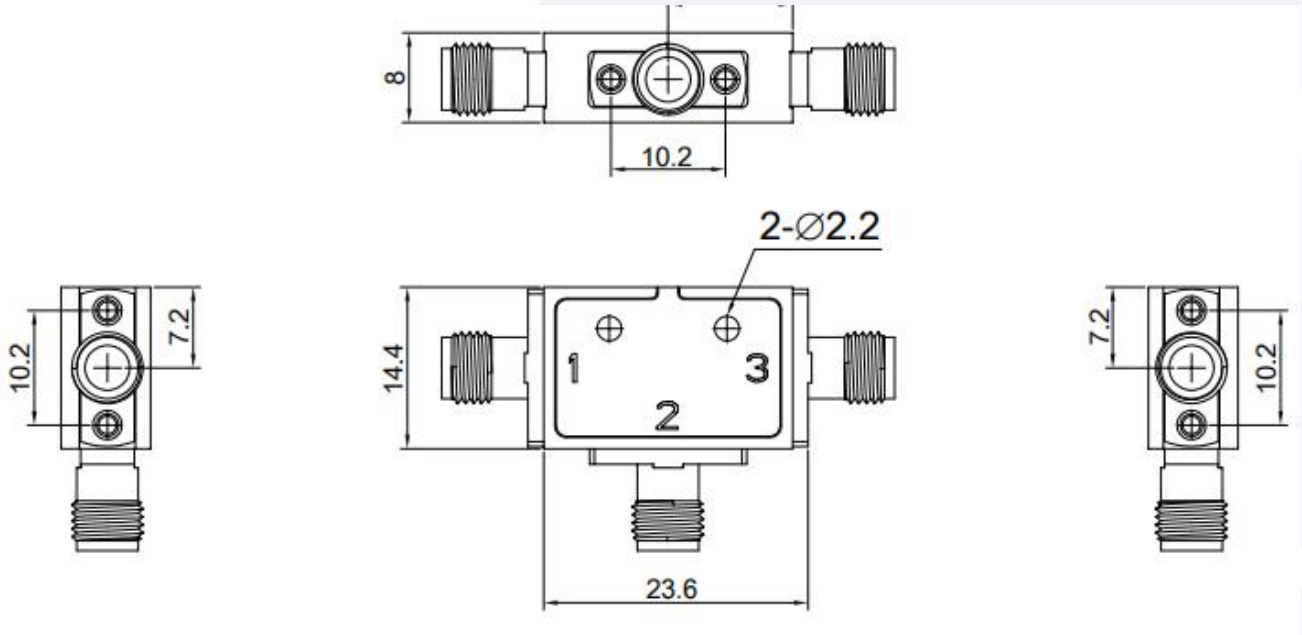

Suzhou Talent Microwave,Inc
sales@talentmw.com
www.talentmw.com

温度环境 Environmental Conditions:

参数 Parameter	Min	Typ	Max	单位 Units
操作温度 Operating Temperature	-10		+65	℃
存储温度 Non-operating Temperature	-45		+85	℃
相对湿度 Relative humidity		95		%
海拔 Altitude	10,000			feet
震动 Shock / Vibration(MIL-STD-810F)	25g rms (15 degree 2KHz) endurance, 1 hour per axis			
冲击 Shock(non operating)	20G for 11msc half sin wave,3 axis both directions			

订货信息 Ordering Information:

标准型号 Base Number	描述 Desciption	版本号 Revision
TLBM-0.5G2.5G-S	Dual Balanced Mixer RF:0.5-2.5GHz,LO:0.5-2.5GHz,IF:DC-1GHz	Rev.1.0